RAILROAD COMMISSION OF TEXAS

PSA Wells, Allocation Wells and Stacked Laterals

Permitting and Completion

Lorenzo Garza & Joe Stasulli

Presentation Overview

- How to qualify for Stacked Lateral status
- Requirements for PSA and Allocation wells
- How to use the P-16 data sheet
- Filing completions for these types of applications

PSA Wells, Allocation Wells and Stacked Laterals

Save (please hit save to see errors on this page) Add Next Edit Operator Address

*Purpose of Filing ○ New Drill ○ Recompletion ○ Reclass ○ Field Transfer ○ Reenter

Expedite ☐

*Wellbore Profiles ☐ Vertical ☐ Horizontal ☐ Directional ☐ Sidetrack

Horizontal Wellbore Type (for Horizontal Wellbore Profiles only) ○ PSA ○ Allocation ○ Stacked Lateral Status Number (for Stacked Lateral only)

*W-1 Defaults Lease name: Well number:

*Total Vertical Depth:

*Do you **have** the right to develop minerals under any right-of-way? ○ Yes ○ No

*Is this well subject to **SWR 36** (hydrogen sulfide area)? **SWR 36** will automatically be determined by the system according to Field List entries provided

Stacked Laterals- how to qualify

- 2 or more horizontal drainhole wells within lease/pooled unit in the correlative interval.
- Horizontal drainholes are drilled from different surface locations.
- The spacing parameters to qualify for stacked lateral status will be determined by your field rules

Make sure your field rules allow for Stacked Laterals

Stacked Laterals- how to qualify cont.

- Each surface location must be permitted separately and assigned its own API number.
- Plat must clearly show all wellbores attempting to qualify for Stacked Lateral status.
- To be considered a “regular location” each well must comply to any minimum lease or between well spacing rules

Stacked Laterals why all the fuss?

- For each well that qualifies as a Stacked Lateral well your overall well count will not increase when the RRC tests your lease for density exceptions.

- Remember that the wells must be completed in the **same regulatory field** and be of the **same well type** to qualify as a stacked lateral.

PSA Wells, Allocation Wells and Stacked Laterals

Stacked Laterals potential problem?

- The only instance in which a PSA/Allocation can have the same unique name is if it is filed as a stacked lateral and completed as an oil well.
- If your well, when completed, does not remain within the established spacing requirements then you will be required to amend the permit to reflect its new status and count this well against your total well count. If you exceed density then an exception to SWR 38 will be needed.

PSA Wells, Allocation Wells and Stacked Laterals

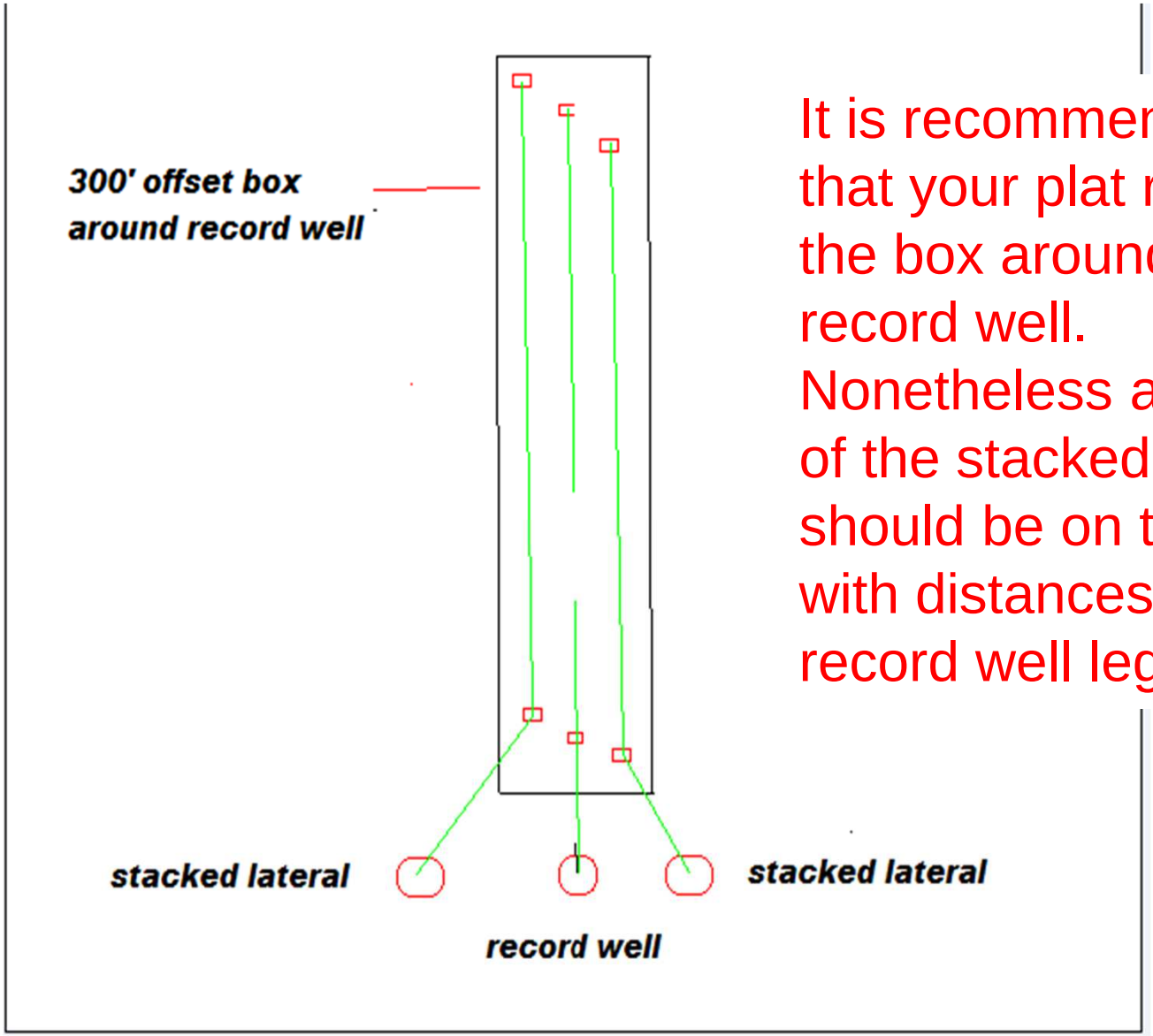

It is recommended that your plat reflect the box around the record well. Nonetheless all wells of the stacked lateral should be on the plat with distances to record well legible.

PSA Wells, Allocation Wells and Stacked Laterals

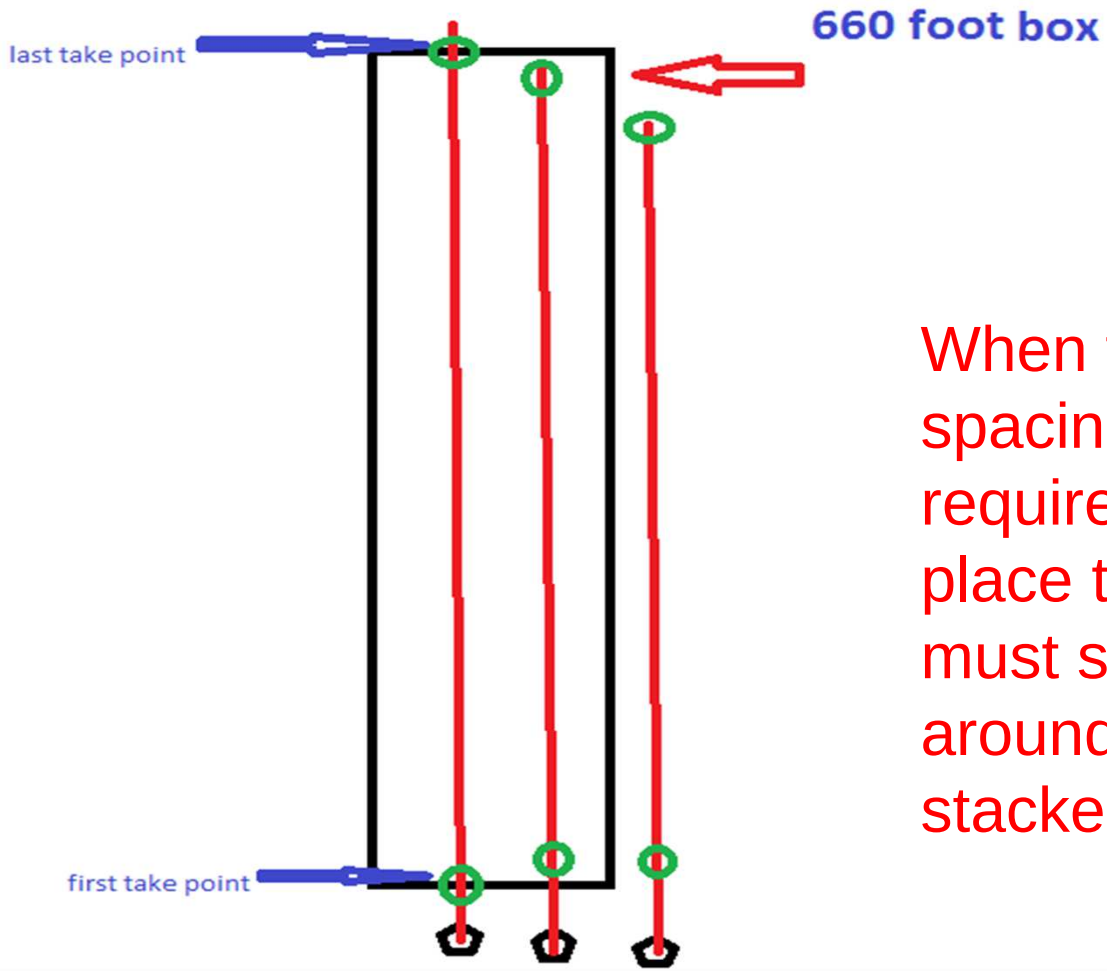

When this type of spacing requirement is in place then plat must show box around all wells in stacked lateral

PSA Wells, Allocation Wells and Stacked Laterals

Example P-16 on standard lease for stacked lateral

SECTION II. WELL INFORMATION

District No.: 08	County: GLASSCOCK	Purpose of Filing:
Well No.: 4H	API No.: 42-173-36511	☑ Drilling Permit Application (Form W-1)
Total Lease Acres: 644.79	Drilling Permit No.: 783176	
Lease Name: LUMBERJACK 32	Lease No.:	☐ Completion Report
Field Name: SPRABERRY TREND AREA	Field No.: 85280300	

Filer is the owner or lessee, or has been authorized by the owner or lessee, of all or an undivided portion of the mineral estate under each tract for which filer is listed as operator below. For all leases operated by other entities, the number of assigned acres shown are reflected on current Commission records or the filer has been authorized by the current operator to change the assigned acreage of that operator as shown below.

SECTION III. LISTING OF ALL WELLS IN THE APPLIED-FOR FIELD ON THE SAME ACREAGE AS THE LEASE, POOLED UNIT, OR UNITIZED TRACT DESIGNATED IN SECTION II ABOVE BY FILER

RRC ID No. or Lease No.	Well No.	H-Horizontal D-Directional V-Vertical	Lease Name	API No.	Acres Assigned	SWR 38 Except. (Y/N)	Operator Name and Operator No. (if different from filing operator)
44920	1	V	LUMBERJACK 32	42-173-35842	80	N	
44920	2	V	LUMBERJACK 32	42-173-36214	80	N	
SL parent	3H	H	LUMBERJACK 32	42-173-36510	80	N	
SL child to 3H	4H	H	LUMBERJACK 32	42-173-36511	0	N	

Total Well Count >	3	80	< A. Total Assigned Horiz. Acreage	240	< C. Total Assigned Acreage
		564.79	< Total Remaining Horiz. Acreage	564.79	< Total Remaining Acreage
		160	< B. Total Assigned Vert./Dir. Acreage		
		484.79	< Total Remaining Vert./Dir. Acreage		

PSA Wells, Allocation Wells and Stacked Laterals

Example P-16 on a Allocation stacked lateral

assigned to the well.

SECTION V. LISTING OF ALL TRACTS CONTRIBUTING ACREAGE TO AN RRC DESIGNATED DRILLSITE DEVELOPMENTAL UNIT THAT IS NOT A SINGLE LEASE, POOLED UNIT, OR GROUP OF TRACTS UNITIZED BY CONTRACT FOR PURPOSES OF SECONDARY RECOVERY					
RRC ID No. or Lease No.	Lease Name	Beginning Lease Acreage	Allocated Lease Acreage	Ending Lease Acreage	Operator Name and Operator No. (if different from filing operator)
009091	Powell 35	640	0	640	
018334	Neal 40-38B	240	0	240	
009469	Neal 40-38	80	0	80	
		Total Allocated Acreage >	0	960	< Total Lease Acreage

Filer is the owner or lessee, or has been authorized by the owner or lessee, of all or an undivided portion of the mineral estate under each tract for which filer is listed as operator below. For all leases operated by other entities, the number of assigned acres shown are reflected on current Commission records or the filer has been authorized by the current operator to change the assigned acreage of that operator as shown below.

SECTION VI. LISTING OF ALL WELLS IN THE APPLIED FOR FIELD ON THE SAME ACREAGE AS THE LEASE OR POOLED UNIT DESIGNATED FOR THE TRACTS LISTED IN SECTION V BY FILER									
RRC ID No. or Lease No.	Well No.	Acres Assigned	SWR 38 Except. (Y/N)	H-Horizontal D-Directional V-Vertical	RRC ID No. or Lease No.	Well No.	Acres Assigned	SWR 38 Except. (Y/N)	H-Horizontal D-Directional V-Vertical
(009091) Powell 35	#3	80	N	V	(018334) Neal 40-38B	#3	40	N	V
(009091) Powell 35	#4	80	N	V	(018334) Neal 40-38B	#4	40	N	V
(009091) Powell 35	#5	80	N	V	(018334) Neal 40-38B	#5	80	N	V
(009091) Powell 35	#6	80	N	V	(018334) Neal 40-38B	#6	80	Y	V
(009091) Powell 35	#7	80	N	V	Powell 35 (Alloc)	#8H	80	N	H
(009091) Powell 35	#9	80	N	V	Powell 35 SL (Alloc)	#11H	0	N	H
(009091) Powell 35	#10	80	N	V	Powell 35 SL (Alloc)	#12H	0	N	H
Powell 35 (Alloc)	#8H	80	N	H					
Powell 35 SL (Alloc)	#11H	0	N	H					
Powell 35 SL (Alloc)	#12H	0	N	H					

PSA Wells, Allocation Wells and Stacked Laterals

Save (please hit save to see errors on this page) Add Next Edit Operator Address

*Purpose of Filing ○ New Drill ○ Recompletion ○ Reclass ○ Field Transfer ○ Reenter

Expedite ☐

*Wellbore Profiles ☐ Vertical ☐ Horizontal ☐ Directional ☐ Sidetrack

Horizontal Wellbore Type (for Horizontal Wellbore Profiles only) ○ PSA ○ Allocation ○ Stacked Lateral Status Number (for Stacked Lateral only)

*W-1 Defaults Lease name: Well number:

*Total Vertical Depth:

*Do you **have** the right to develop minerals under any right-of-way? ○ Yes ○ No

*Is this well subject to **SWR 36** (hydrogen sulfide area)? **SWR 36** will automatically be determined by the system according to Field List entries provided

PRODUCTION SHARING AGREEMENTS

Supporting Documentation:

- Authorization letter to include % of participation
- PSA-12 form showing acreage to be assigned to proposed well
- Plat showing the external boundary of all tracts contributing acreage to the proposed well
- Well allocation worksheet

PSA Wells, Allocation Wells and Stacked Laterals

PRODUCTION SHARING AGREEMENTS

Supporting Documentation:

- P-16 Data Sheet

RAILROAD COMMISSION OF TEXAS
1701 N. Congress
P.O. Box 12967
Austin, Texas 78701-2967

P-16 Data Sheet
(Optional)
Page 1
Rev. 09/2014

Acreage Designation

SECTION I. OPERATOR INFORMATION

Operator Name:	Operator P-5 No.:
Operator Address:	

SECTION II. WELL INFORMATION

District No.:	County:	Purpose of Filing:
Well No.:	API No.:	☐ Drilling Permit Application (Form W-1)
Total Lease Acres:	Drilling Permit No.:	☐ Completion Report (Form G-1/W-2)
Lease Name:	Lease No.:	
Field Name:	Field No.:	

Filer is the owner or lessee, or has been authorized by the owner or lessee, of all or an undivided portion of the mineral estate under each tract for which filer is listed as operator below. For all leases operated by other entities, the number of assigned acres shown are reflected on current Commission records or the filer has been authorized by the current operator to change the assigned acreage of that operator as shown below.

SECTION III. LISTING OF ALL WELLS IN THE APPLIED-FOR FIELD ON THE SAME ACREAGE AS THE LEASE, POOLED UNIT, OR UNITIZED TRACT DESIGNATED IN SECTION II ABOVE BY FILER

RRC ID No. or Lease No.	Well No.	H-Horizontal D-Directional V-Vertical	Lease Name	API No.	Acres Assigned	SWR 38 Except. (Y/N)	Operator Name and Operator No. (if different from filing operator)
Total Well Count >	0		< A. Total Assigned Horiz. Acreage		0		< C. Total Assigned Acreage
			< Total Remaining Horiz. Acreage				< Total Remaining Acreage
			< B. Total Assigned Vert./Dir. Acreage				
			< Total Remaining Vert./Dir. Acreage				

SECTION IV. REMARKS / PURPOSE OF FILING (see instructions)

Attach Additional Pages As Needed. ☐ No additional pages ☐ Additional Pages: ____ (No. of additional pages)

CERTIFICATION: I declare under penalties prescribed in Sec. 91.143, Texas Natural Resources Code, that this report was prepared by me or under my supervision or direction, that I am authorized to make this report, and that the information contained in this report is true, correct, and complete to the best of my knowledge.

Signature | Name and title (type or print) | Email (include email address *only* if you affirmatively consent to its public release)

PSA Wells, Allocation Wells and Stacked Laterals

P-16 Data Sheet

RAILROAD COMMISSION OF TEXAS
1701 N. Congress
P.O. Box 12967
Austin, Texas 78701-2967

P-16 Data Sheet (Optional)
Page 1
Rev. 09/2014

Acreage Designation

SECTION I. OPERATOR INFORMATION	
Operator Name:	Operator P-5 No.:
Operator Address:	

SECTION II. WELL INFORMATION		
District No.:	County:	Purpose of Filing:
Well No.:	API No.:	☐ Drilling Permit Application (Form W-1)
Total Lease Acres:	Drilling Permit No.:	☐ Completion Report (Form G-1/W-2)
Lease Name:	Lease No.:	
Field Name:	Field No.:	

Filer is the owner or lessee, or has been authorized by the owner or lessee, of all or an undivided portion of the mineral estate under each tract for which filer is listed as operator below. For all leases operated by other entities, the number of assigned acres shown are reflected on current Commission records or the filer has been authorized by the current operator to change the assigned acreage of that operator as shown below.

SECTION III. LISTING OF ALL WELLS IN THE APPLIED-FOR FIELD ON THE SAME ACREAGE AS THE LEASE, POOLED UNIT, OR UNITIZED TRACT DESIGNATED IN SECTION II ABOVE BY FILER

Question for you: What is the primary function of the Drilling Permit section when processing a W-1 drilling permit application?

PSA Wells, Allocation Wells and Stacked Laterals

P-16 Data Sheet

SECTION III. LISTING OF ALL WELLS IN THE APPLIED-FOR FIELD ON THE SAME ACREAGE AS THE LEASE, POOLED UNIT, OR UNITIZED TRACT DESIGNATED IN SECTION II ABOVE BY FILER

RRC ID No. or Lease No.	Well No.	H-Horizontal D-Directional V-Vertical	Lease Name	API No.	Acres Assigned	SWR 38 Except. (Y/N)	Operator Name and Operator No. (if different from filing operator)
Total Well Count >	0		< A. Total Assigned Horiz. Acreage		0		< C. Total Assigned Acreage
			< Total Remaining Horiz. Acreage				< Total Remaining Acreage
			< B. Total Assigned Vert./Dir. Acreage				
			< Total Remaining Vert./Dir. Acreage				

SECTION IV. REMARKS / PURPOSE OF FILING (see instructions)

Attach Additional Pages As Needed. ☐ No additional pages ☐ Additional Pages: _____ (No. of additional pages)

CERTIFICATION: I declare under penalties prescribed in Sec. 91.143, Texas Natural Resources Code, that this report was prepared by me or under my supervision or direction, that I am authorized to make this report, and that the information contained in this report is true, correct, and complete to the best of my knowledge.

Signature | Name and title (type or print) | Email (include email address *only* if you affirmatively consent to its public release)

PSA Wells, Allocation Wells and Stacked Laterals

P-16 Data Sheet

RAILROAD COMMISSION OF TEXAS
1701 N. Congress
P.O. Box 12967
Austin, Texas 78701-2967

P-16 Data Sheet
(Optional)
Page 2
Rev. 09/2014

Acreage Designation

Filer is the owner or lessee of all or an undivided portion of the minerals under each tract listed below and has the legal right to drill on each tract traversed by the well that will have perforations or other take points open in the interval of the applied-for field(s). All tracts listed will actually be traversed by the wellbore or the filer has pooling authority or other contractual authority, such as a production sharing agreement, authorizing inclusion of the non-drillsite tract in the acreage assigned to the well.

SECTION V. LISTING OF ALL TRACTS CONTRIBUTING ACREAGE TO AN RRC DESIGNATED DRILLSITE DEVELOPMENTAL UNIT THAT IS NOT A SINGLE LEASE, POOLED UNIT, OR GROUP OF TRACTS UNITIZED BY CONTRACT FOR PURPOSES OF SECONDARY RECOVERY

RRC ID No. or Lease No.	Lease Name	Beginning Lease Acreage	Allocated Lease Acreage	Ending Lease Acreage	Operator Name and Operator No. (if different from filing operator)
		Total Allocated Acreage >	0	0	< Total Lease Acreage

Section V. replaces the PSA-12 form that would be required with a PSA or Allocation permit

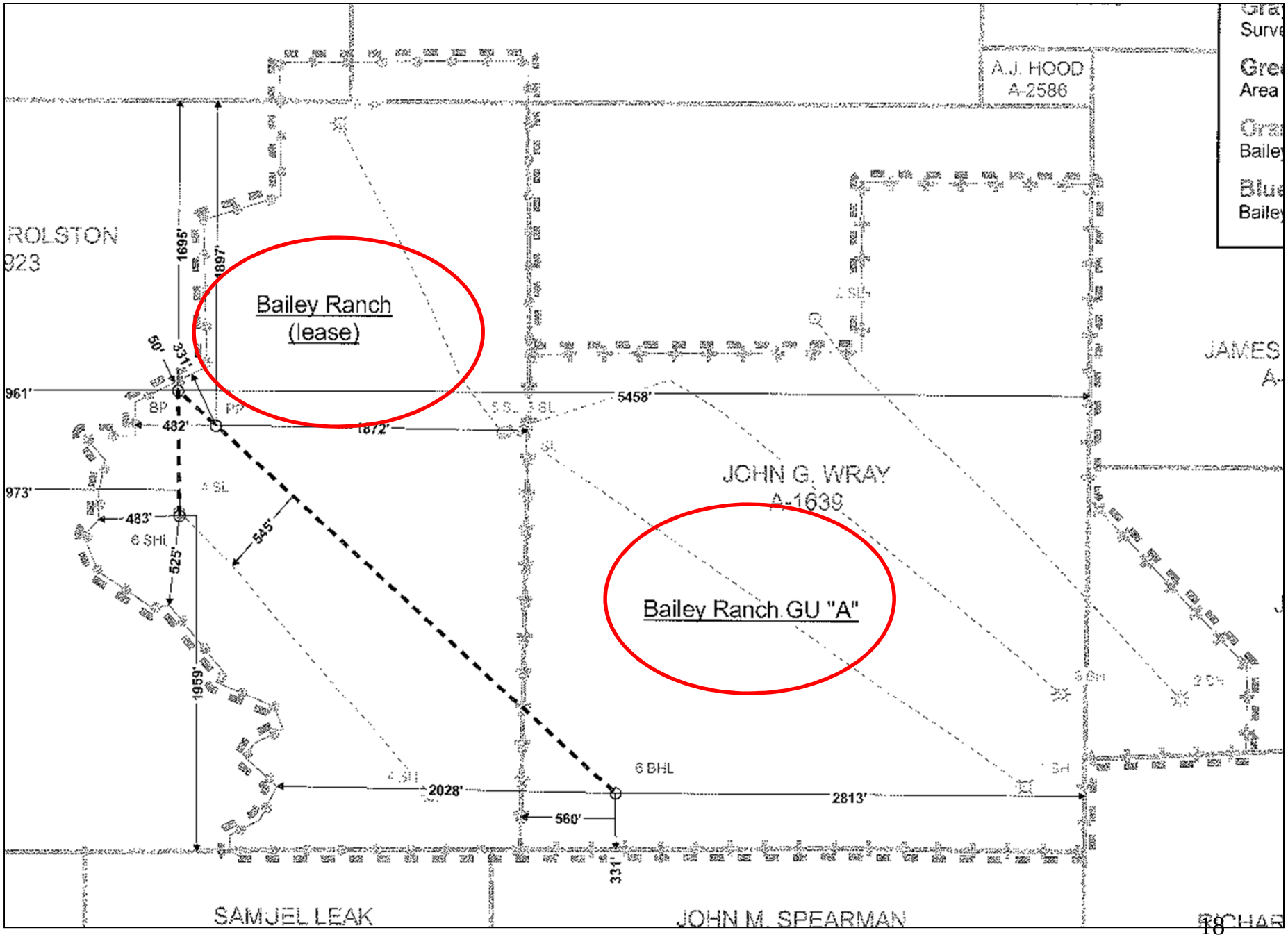
A.J. HOOD
A-2586
ROLSTON
923
Bailey Ranch
(lease)
JOHN G. WRAY
A-1639
Bailey Ranch GU "A"
JAMES
SAMUEL LEAK
JOHN M. SPEARMAN
1695'
1867'
50'
331'
961'
482'
1872'
5458'
973'
483'
545'
525'
1959'
2028'
560'
2813'
331'
6 BHL
6 SHL

PSA Wells, Allocation Wells and Stacked Laterals

P-16 Data Sheet

Filer is the owner or lessee, or has been authorized by the owner or lessee, of all or an undivided portion of the mineral estate under each tract for which filer is listed as operator below. For all leases operated by other entities, the number of assigned acres shown are reflected on current Commission records or the filer has been authorized by the current operator to change the assigned acreage of that operator as shown below.

SECTION VI. LISTING OF ALL WELLS IN THE APPLIED FOR FIELD ON THE SAME ACREAGE AS THE LEASE OR POOLED UNIT DESIGNATED FOR THE TRACTS LISTED IN SECTION V BY FILER

RRC ID No. or Lease No.	Well No.	Acres Assigned	SWR 38 Except. (Y/N)	H-Horizontal D-Directional V-Vertical	RRC ID No. or Lease No.	Well No.	Acres Assigned	SWR 38 Except. (Y/N)	H-Horizontal D-Directional V-Vertical
A. Total Wells & Acreage >	0	0			A. Total Wells & Acreage >	0	0		
B. Total Assigned Horiz. Acreage >					B. Total Assigned Horiz. Acreage >				
C. Total Assigned Vert./Dir. Acreage >					C. Total Assigned Vert./Dir. Acreage >				

SECTION VII. REMARKS

Section VI. replaces the acreage allocation worksheet that would be required with a PSA or Allocation permit

PSA Wells, Allocation Wells and Stacked Laterals

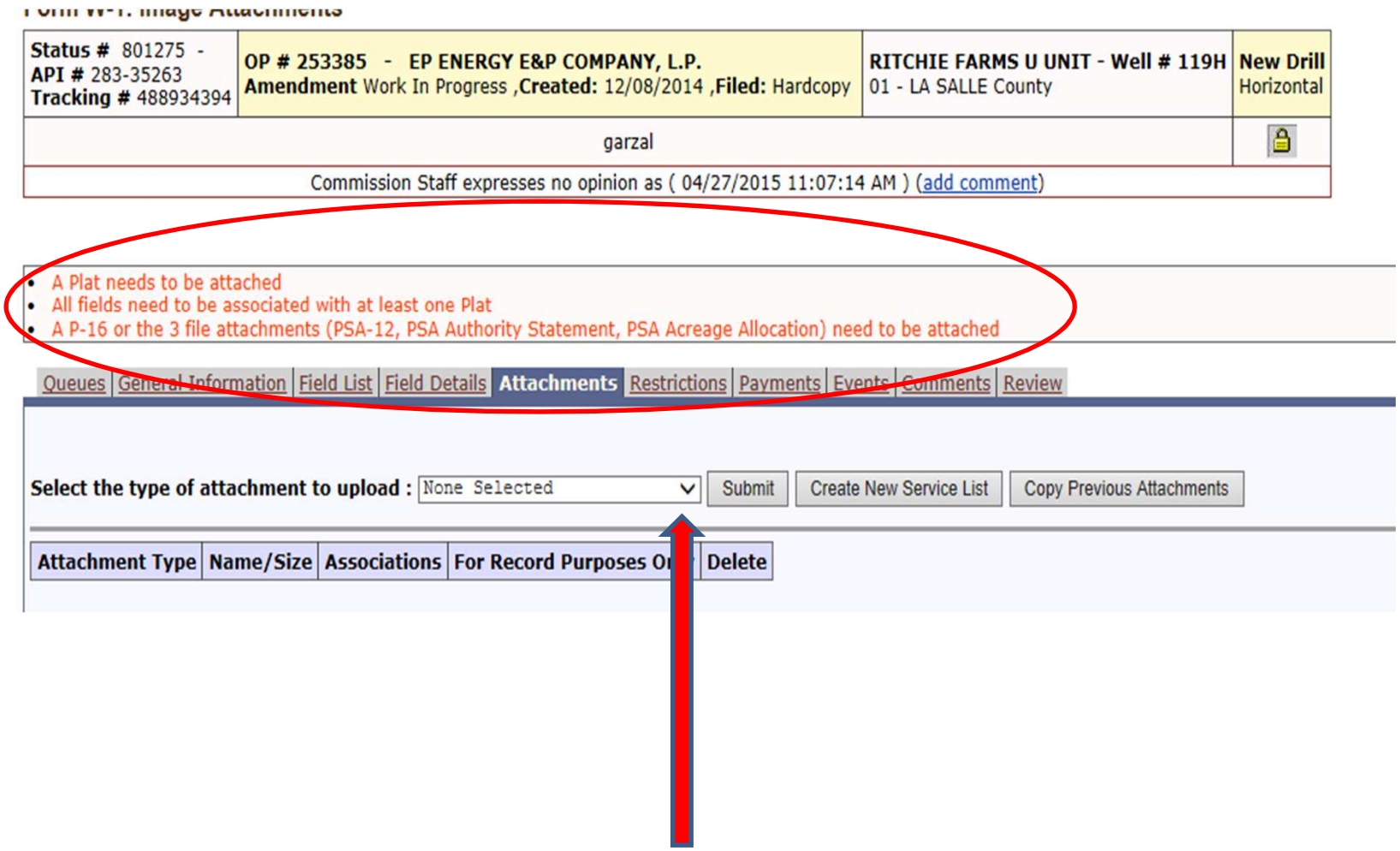

PSA Wells, Allocation Wells and Stacked Laterals

Save (please hit save to see errors on this page) Add Next Edit Operator Address

*Purpose of Filing ○ New Drill ○ Recompletion ○ Reclass ○ Field Transfer ○ Reenter

Expedite ☐

*Wellbore Profiles ☐ Vertical ☐ Horizontal ☐ Directional ☐ Sidetrack

Horizontal Wellbore Type (for Horizontal Wellbore Profiles only) ○ PSA ○ Allocation ○ Stacked Lateral Status Number (for Stacked Lateral only)

*W-1 Defaults Lease name: Well number:

*Total Vertical Depth:

*Do you **have** the right to develop minerals under any right-of-way? ○ Yes ○ No

*Is this well subject to **SWR 36** (hydrogen sulfide area)? **SWR 36** will automatically be determined by the system according to Field List entries provided

PSA Wells, Allocation Wells and Stacked Laterals

What is the difference between a "PSA" well and an "Allocation" well?

1. On tracts that you have a valid lease in place an "Allocation" well permit will allow you to get a drilling permit application without the qualifier that you have to provide for a "PSA" well. A statement that states that 65% of both mineral and working interest owners have signed an agreement as to how production proceeds will be divided is not needed.

2. What it doesn't allow you to do is incorporate tracts into your "Allocation" unit that the wellbore does not traverse.

PSA or ALLOCATION WELLS

SWR Exceptions:

Lease line

- PSA and Allocation well applications will always require an exception

Between Well

- Normal notification procedures will be followed

Density Exception

- Unless specified in the field rules normal notification and data requirements will be followed

PSA Wells, Allocation Wells and Stacked Laterals

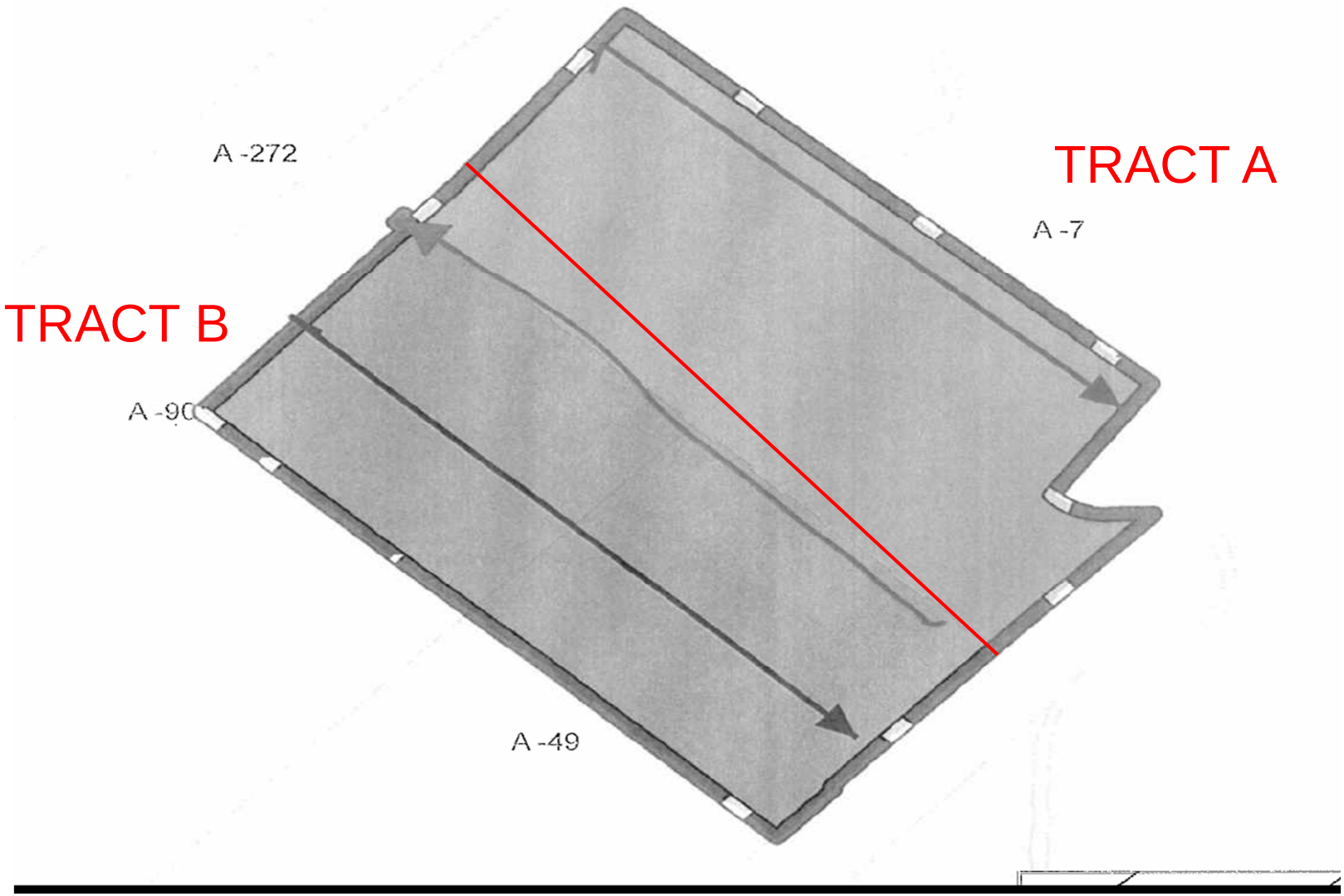

Can this well be filed as an Allocation well?

PSA Wells, Allocation Wells and Stacked Laterals

PSA or ALLOCATION WELLS -Example

RAILROAD COMMISSION OF TEXAS
1701 N. Congress
P.O. Box 12967
Austin, Texas 78701-2967

P-16 Data Sheet
Page 1
Rev. __/2014

Acreage Designation

SECTION I. OPERATOR INFORMATION	
Operator Name: PARSLEY ENERGY OPERATIONS, LLC	**Operator P-5 No.:** 642652
Operator Address: 303 COLORADO, SUITE 3000, AUSTIN, TX 78701	

SECTION II. WELL INFORMATION	
District No.: 7C	**County:** UPTON
Well No.: 4207H	**API No.:**
Total Lease Acres: 501.8	**Drilling Permit No.:**
Lease Name: DAVIDSON 12	**Lease No.:** 18605
Field Name: SPRABERRY (TREND AREA) R 40 EXC	**Field No.:** 85279201

Filer is the owner or lessee, or has been authorized by the owner or lessee, of all or an undivided portion of the mineral estate under each tract for which filer is listed as operator below. For all leases operated by other entities, the number of assigned acres shown are reflected on current Commission records or the filer has been authorized by the current operator to change the assigned acreage of that operator as shown below.

SECTION III. LISTING OF ALL WELLS IN THE APPLIED-FOR FIELD ON THE SAME ACREAGE AS THE LEASE, POOLED UNIT, OR UNITIZED TRACT DESIGNATED IN SECTION II ABOVE BY FILER

RRC ID No. or Lease No.	Well No.	H-Horizontal D-Directional V-Vertical	Lease Name	API No.	Acres Assigned	Operator Name and Operator No. (if different from filing operator)

PSA Wells, Allocation Wells and Stacked Laterals

PSA or ALLOCATION WELLS -Example

RAILROAD COMMISSION OF TEXAS
1701 N. Congress
P.O. Box 12967
Austin, Texas 78701-2967

P-16 Data Sheet
Page 2
Rev. __/2014

Acreage Designation

Filer is the owner or lessee of all or an undivided portion of the minerals under each tract listed below and has the legal right to drill on each tract traversed by the well that will have perforations or other take points open in the interval of the applied-for field(s). All tracts listed will actually be traversed by the wellbore or the filer has pooling authority or other contractual authority, such as a production sharing agreement, authorizing inclusion of the non-drillsite tract in the acreage assigned to the well.

SECTION V. LISTING OF ALL TRACTS CONTRIBUTING ACREAGE TO AN RRC DESIGNATED DRILLSITE DEVELOPMENTAL UNIT THAT IS NOT A SINGLE LEASE, POOLED UNIT, OR GROUP OF TRACTS UNITIZED BY CONTRACT FOR PURPOSES OF SECONDARY RECOVERY

RRC ID No. or Lease No.	Lease Name	Beginning Lease Acreage	Allocated Lease Acreage	Ending Lease Acreage	Operator Name and Operator No. (if different from filing operator)
18605	Davidson 12	167.2	33.44	133.76	
18767	Davidson 12A	334.6	47.8	286.8	

If multiple operators are contributing acreage to the well then a waiver from second operator is needed concerning assignment of acreage and SWR exception.

PSA Wells, Allocation Wells and Stacked Laterals

PSA or ALLOCATION WELLS -Example

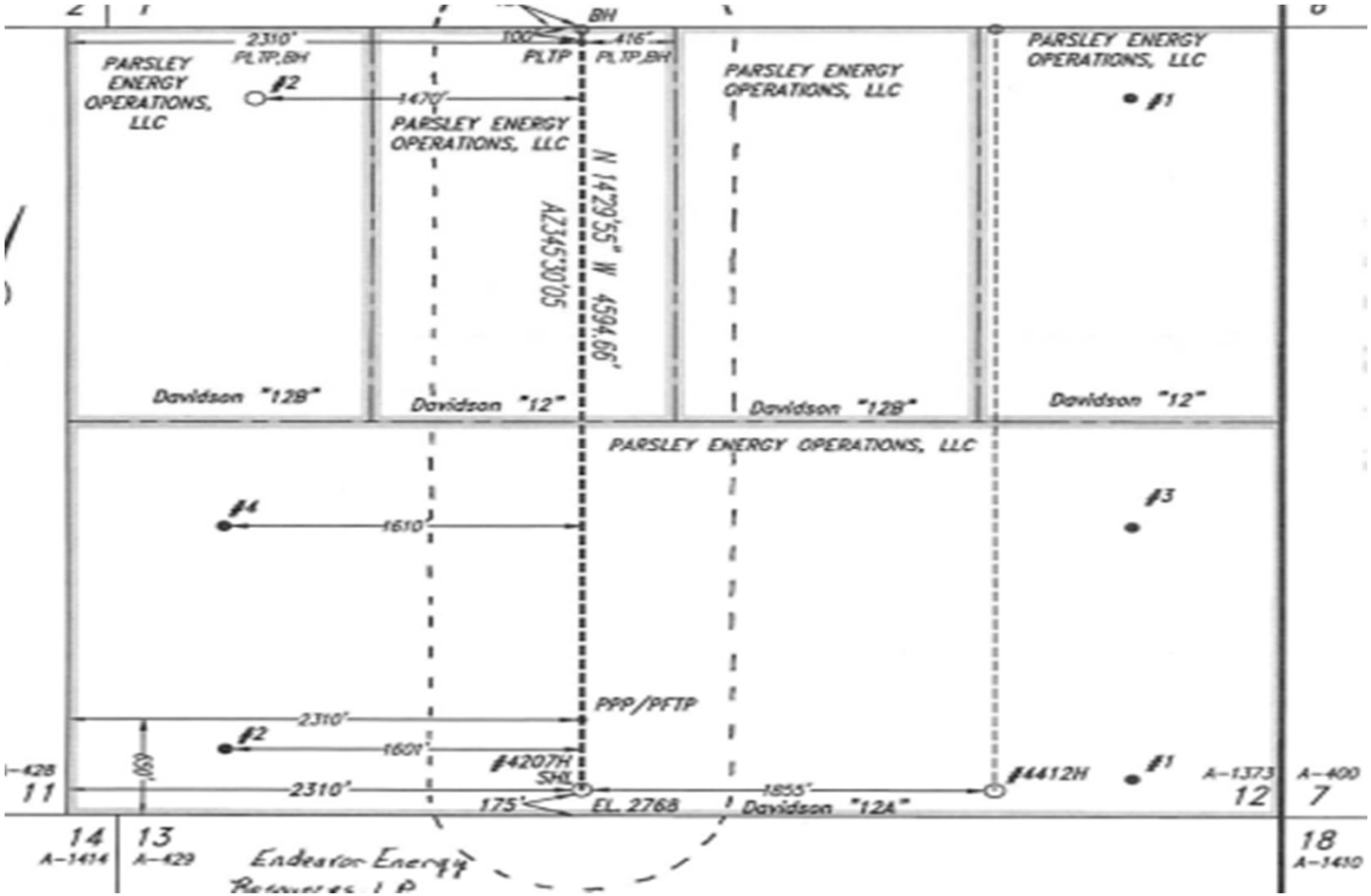

PSA Wells, Allocation Wells and Stacked Laterals

PSA or ALLOCATION WELLS -Example

Filer is the owner or lessee, or has been authorized by the owner or lessee, of all or an undivided portion of the mineral estate under each tract for which filer is listed as operator below. For all leases operated by other entities, the number of assigned acres shown are reflected on current Commission records or the filer has been authorized by the current operator to change the assigned acreage of that operator as shown below.

SECTION VI. LISTING OF ALL WELLS IN THE APPLIED FOR FIELD ON THE SAME ACREAGE AS THE LEASE OR POOLED UNIT DESIGNATED FOR THE TRACTS LISTED IN SECTION V BY FILER

RRC ID No. or Lease No.	Well No.	Acres Assigned	H-Horizontal D-Directional V-Vertical	RRC ID No. or Lease No.	Well No.	Acres Assigned	H-Horizontal D-Directional V-Vertical
18605	1	33.44	V	18767	1	47.8	V
775661	2	33.44	V	786253	2	47.8	V
802536	17H	33.44	H	786962	3	47.8	V
803845	4412H	33.44	H	788001	4	47.8	V
				802536	17H	47.8	H
				803845	4412H	47.8	H

A. Total Wells & Acreage >	4	133.76	A. Total Wells & Acreage >	6	286.8
B. Total Assigned Horiz. Acreage >		66.88	B. Total Assigned Horiz. Acreage >		191.2
C. Total Assigned Vert./Dir. Acreage >		66.88	C. Total Assigned Vert./Dir. Acreage >		95.6

SECTION VII. REMARKS

This information comes from the current proration schedule or minimum acreage required per field rules.

Things to Remember

- Verify what kind of spacing requirements are in place for stacked laterals to determine if the “box” must be on the plat.
- All PSA or Allocation permits require a SWR 37 lease line exception.
- Know primary difference between PSA and Allocation Well permit.

Things to Remember

- If using the P-16 data sheet remember that Section VI must reflect **current proration** schedule acreage assignments. For permitted locations the minimum acreage required per field rules should be listed.

- If multiple operators involved then waiver must be attached for proration and exception resolution.

Contact Information

For further questions concerning Drilling Permits please contact:

Lorenzo Garza

Phone: 512-463-2184

Email: Lorenzo.Garza@rrc.state.gov

Valerie Atkins

Phone: 512-463-6979

Email: Valerie.Atkins@rrc.state.gov

Now Presenting Mr. Joe Stasulli

Railroad Commission of Texas

Operator Procedures for PSA and Allocation Wells

Well Compliance Procedures for PSA/Allocation Wells

What is the difference between a "PSA" well and an "Allocation" well?

1. On tracts that you have a valid lease in place an "Allocation" well permit will allow you to get a drilling permit application without the qualifier that you have to provide for a "PSA" well. A statement that states that 65% of both mineral and working interest owners have signed an agreement as to how production proceeds will be divided is not needed.

2. What it doesn't allow you to do is incorporate tracts into your "Allocation" unit that the wellbore does not traverse.

Well Compliance Procedures for PSA/Allocation Wells

Supporting Documentation:

- Authorization letter to include % of participation
- Form PSA 12 must be associated with G-1/W-2 packet.
- Complete Proration Acreage List is required for all wells on any leases that may be affected by the sharing agreement. Each Proration Acreage List must include remarks for the Shared Acreage Agreement.
- Each Proration Acreage List must contain total accurate acreage figures for shared leases. Acreage totals must match information listed on the PSA 12.

Well Compliance Procedures for PSA/Allocation Wells

Supporting Documentation:

- Plat showing the external boundary of all tracts contributing acreage to the proposed well.
- P-15 for the completed well with shared acreage remarks.
- P-15 for any other well(s) where acreage has been amended or revised de to shared acreage.

P-16 DATA SHEET

Use the P-16 Data Sheet to replace these forms and documents:

1) PSA 12
2) Proration Acreage List
3) Form P15
4) Authority Statement – disclosure of contractual rights to drill and produce

P-16 for PSA/Allocation:

RAILROAD COMMISSION OF TEXAS
1701 N. Congress
P.O. Box 12967
Austin, Texas 78701-2967

P-16 Data Sheet (Optional)
Page 1
Rev. 09/2014

Acreage Designation

SECTION I. OPERATOR INFORMATION	
Operator Name: WOODBINE ACQUISITION LLC	**Operator P-5 No.:** 937857
Operator Address: 301 COMMERCE STREET, STE 2150; FORT WORTH, TX 76102	

SECTION II. WELL INFORMATION		
District No.: 03	**County:** MADISON	**Purpose of Filing:**
Well No.: 3 H	**API No.:** 313-30980	☐ Drilling Permit Application (Form W-1)
Total Lease Acres: 395.22 TOTAL COMBINED ACRES FOR ALL LEASES	**Drilling Permit No.:** 758115	☑ Completion Report (Form G-1/W-2)
Lease Name: CHERYL LIND FLEMING UNIT (ALLOC)	**Lease No.:** PENDING	
Field Name: MADISONVILLE, W. (WOODBINE -A-)	**Field No.:** 56599500	

Well Compliance Procedures for PSA/Allocation Wells

Filer is the owner or lessee, or has been authorized by the owner or lessee, of all or an undivided portion of the mineral estate under each tract for which filer is listed as operator below. For all leases operated by other entities, the number of assigned acres shown are reflected on current Commission records or the filer has been authorized by the current operator to change the assigned acreage of that operator as shown below.

SECTION III. LISTING OF ALL WELLS IN THE APPLIED-FOR FIELD ON THE SAME ACREAGE AS THE LEASE, POOLED UNIT, OR UNITIZED TRACT DESIGNATED IN SECTION II ABOVE BY FILER

RRC ID No. or Lease No.	Well No.	H-Horizontal D-Directional V-Vertical	Lease Name	API No.	Acres Assigned	SWR 38 Except. (Y/N)	Operator Name and Operator No. (if different from filing operator)
758115	3 H	H	CHERYL LIND FLEMING UNIT (ALLOC)	313-30980	274.42	N	

Total Well Count >	1	274.42	< A. Total Assigned Horiz. Acreage	274.42	< C. Total Assigned Acreage
		0	< Total Remaining Horiz. Acreage	0	< Total Remaining Acreage
		0	< B. Total Assigned Vert./Dir. Acreage		
		0	< Total Remaining Vert./Dir. Acreage		

SECTION IV. REMARKS / PURPOSE OF FILING (see instructions)

ALLOCATION WELL.

USE THIS AREA FOR THE PURPOSE OF FILING AND TO PROVIDE ANY ADDTIONAL INFORMATION TO ASSIST IN EXPEDITING OF THE APPLICATION

Well Compliance Procedures for PSA/Allocation Wells

RAILROAD COMMISSION OF TEXAS
1701 N. Congress
P.O. Box 12967
Austin, Texas 78701-2967

P-16 Data Sheet (Optional)
Page 2
Rev. 09/2014

Acreage Designation

Filer is the owner or lessee of all or an undivided portion of the minerals under each tract listed below and has the legal right to drill on each tract traversed by the well that will have perforations or other take points open in the interval of the applied-for field(s). All tracts listed will actually be traversed by the wellbore or the filer has pooling authority or other contractual authority, such as a production sharing agreement, authorizing inclusion of the non-drillsite tract in the acreage assigned to the well.

SECTION V. LISTING OF ALL TRACTS CONTRIBUTING ACREAGE TO AN RRC DESIGNATED DRILLSITE DEVELOPMENTAL UNIT THAT IS NOT A SINGLE LEASE, POOLED UNIT, OR GROUP OF TRACTS UNITIZED BY CONTRACT FOR PURPOSES OF SECONDARY RECOVERY					
RRC ID No. or Lease No.	Lease Name	Beginning Lease Acreage	Allocated Lease Acreage	Ending Lease Acreage	Operator Name and Operator No. (if different from filing operator)
19774	FLEMING, LURLYN JANUARY	160	39.2	120.8	
23567	CHERYL LINDBERG FLEMING OIL UNIT	235.22	125.22	0	
		Total Allocated Acreage >	164.42	120.8	< Total Lease Acreage

Well Compliance Procedures for PSA/Allocation Wells

Filer is the owner or lessee, or has been authorized by the owner or lessee, of all or an undivided portion of the mineral estate under each tract for which filer is listed as operator below. For all leases operated by other entities, the number of assigned acres shown are reflected on current Commission records or the filer has been authorized by the current operator to change the assigned acreage of that operator as shown below.

SECTION VI. LISTING OF ALL WELLS IN THE APPLIED FOR FIELD ON THE SAME ACREAGE AS THE LEASE OR POOLED UNIT DESIGNATED FOR THE TRACTS LISTED IN SECTION V BY FILER

RRC ID No. or Lease No.	Well No.	Acres Assigned	SWR 38 Except. (Y/N)	H-Horizontal D-Directional V-Vertical
19774	1	120.8	N	H
758115	3 H	39.2	N	H

A. Total Wells & Acreage >	2	160
B. Total Assigned Horiz. Acreage >		39.2
C. Total Assigned Vert./Dir. Acreage >		120.8

RRC ID No. or Lease No.	Well No.	Acres Assigned	SWR 38 Except. (Y/N)	H-Horizontal D-Directional V-Vertical
23567	1 H	120	N	H
758115	3 H	125.22	N	H

A. Total Wells & Acreage >	2	245.22
B. Total Assigned Horiz. Acreage >		235.22
C. Total Assigned Vert./Dir. Acreage >		0

SECTION VII. REMARKS

PSA/ALLOCATION WELL SHOULD BE ASSOCIATED WILL ALL LEASES/TRACTS THAT ARE CONTRIBUTING ACREAGE

P-16 for Proration Acreage List

(only page 1 required)

RAILROAD COMMISSION OF TEXAS
1701 N. Congress
P.O. Box 12967
Austin, Texas 78701-2967

P-16 Data Sheet
Page 1
Rev. __/2014

Acreage Designation

SECTION I. OPERATOR INFORMATION	
Operator Name: JACKSON OPERATING	**Operator P-5 No.:** 999999
Operator Address: 1701 N CONGRESS, AUSTIN TX 78701	

SECTION II. WELL INFORMATION		
District No.: 10	**County:** ROBERTS	**Purpose of Filing:**
Well No.: 837H	**API No.:** 393-55555	☐ Drilling Permit Application (Form W-1)
Total Lease Acres: 900	**Drilling Permit No.:** 777777	☑ Completion Report (Form G-1/W-2)
Lease Name: CRUE "A"	**Lease No.:** PENDING	
Field Name: DIABLO (LOWER)	**Field No.:** 64067500	

Well Compliance Procedures for PSA/Allocation Wells

Filer is the owner or lessee, or has been authorized by the owner or lessee, of all or an undivided portion of the mineral estate under each tract for which filer is listed as operator below. For all leases operated by other entities, the number of assigned acres shown are reflected on current Commission records or the filer has been authorized by the current operator to change the assigned acreage of that operator as shown below.

SECTION III. LISTING OF ALL WELLS IN THE APPLIED-FOR FIELD ON THE SAME ACREAGE AS THE LEASE, POOLED UNIT, OR UNITIZED TRACT DESIGNATED IN SECTION II ABOVE BY FILER

RRC ID No. or Lease No.	Well No.	H-Horizontal D-Directional V-Vertical	Lease Name	API No.	Acres Assigned	SWR 38 Except. (Y/N)	Operator Name and Operator No. (if different from filing operator)
777777	837H	H	CRUE "A"	393-55555	100	Y	
225766	821H	H	CRUE "A"	393-37895	160	N	
226754	822H	H	CRUE "A"	393-38955	160	N	
227853	827H	H	CRUE "A"	393-39543	160	N	
227955	833H	H	CRUE "A"	393-39567	160	N	
228103	835H	H	CRUE "A"	393-39587	160	N	

Total Well Count >	6		< A. Total Assigned Horiz. Acreage	900	< C. Total Assigned Acreage
			< Total Remaining Horiz. Acreage	0	< Total Remaining Acreage
			< B. Total Assigned Vert./Dir. Acreage		
			< Total Remaining Vert./Dir. Acreage		

SECTION IV. REMARKS / PURPOSE OF FILING (see instructions)

PRORATION ACERAGE LIST

UPDATE ALL PRORATION ACRES ON AN ENTIRE LEASE WITHOUT HAVING TO FILE INDVIDUAL P-15's UNLESS FIELD RULES STILL REQUIRE PRORATION PLATS.

Well Compliance Procedures for PSA/Allocation Wells

P-16 for more than one operator on the same lease

(only page 1 required)

RAILROAD COMMISSION OF TEXAS
1701 N. Congress
P.O. Box 12967
Austin, Texas 78701-2967

P-16 Data Sheet
Page 1
Rev. __/2014

Acreage Designation

SECTION I. OPERATOR INFORMATION	
Operator Name: SMITH OPERATING	**Operator P-5 No.:** 559999
Operator Address:	

SECTION II. WELL INFORMATION		
District No.: 10	**County:** ROBERTS	**Purpose of Filing:**
Well No.: 874H	**API No.:** 393-32222	☐ Drilling Permit Application (Form W-1)
Total Lease Acres: 646.7	**Drilling Permit No.:** 777777	☑ Completion Report (Form G-1/W-2)
Lease Name: SMITH RANCH "A"	**Lease No.:** PENDING	
Field Name: MENDOTA, NW (GRANITE WASH)	**Field No.:** 60462500	

Well Compliance Procedures for PSA/Allocation Wells

Filer is the owner or lessee, or has been authorized by the owner or lessee, of all or an undivided portion of the mineral estate under each tract for which filer is listed as operator below. For all leases operated by other entities, the number of assigned acres shown are reflected on current Commission records or the filer has been authorized by the current operator to change the assigned acreage of that operator as shown below.

SECTION III. LISTING OF ALL WELLS IN THE APPLIED-FOR FIELD ON THE SAME ACREAGE AS THE LEASE, POOLED UNIT, OR UNITIZED TRACT DESIGNATED IN SECTION II ABOVE BY FILER

RRC ID No. or Lease No.	Well No.	H-Horizontal D-Directional V-Vertical	Lease Name	API No.	Acres Assigned	SWR 38 Except. (Y/N)	Operator Name and Operator No. (if different from filing operator)
77777 (PENDING0	826H	H	SMITH RANCH "A"	393-32500	30	Y	
250131	821	V	SMITH RANCH "A"	393-32223	10	Y	
253233	822	V	SMITH RANCH "A"	393-32254	10	Y	
254684	824	V	SMITH RANCH "A"	393-32256	10	Y	
082358	825	V	SMITH RANCH "A"	393-32364	10	Y	
092572	2L	V	SMITH RANCH "A"	393-32368	10	Y	
158590	3L	V	SMITH RANCH "A"	393-32472	63	Y	
159627	5	V	SMITH RANCH "A"	393-32555	63	Y	FRANKLIN OPERATING (895432)
166493	6082	V	SMITH RANCH "A"	393-32598	63	Y	FRANKLIN OPERATING (895432)
170708	7	V	SMITH RANCH "A"	393-32682	63	Y	FRANKLIN OPERATING (895432)
218937	9082	V	SMITH RANCH "A"	393-32888	63	Y	FRANKLIN OPERATING (895432)
07211	10	V	SMITH RANCH "A"	393-32925	63	Y	FRANKLIN OPERATING (895432)
252891	8	V	SMITH RANCH "A"	393-33334	63	Y	FRANKLIN OPERATING (895432)
253432	12H	H	SMITH RANCH "A"	393-33455	63	Y	JOHNSON OPERATING (756768)
254785	13	V	SMITH RANCH "A"	393-47853	62.7	Y	JOHNSON OPERATING (756768)

Total Well Count >	15		**< A. Total Assigned Horiz. Acreage**	646.7	**< C. Total Assigned Acreage**
			< Total Remaining Horiz. Acreage	0	**< Total Remaining Acreage**
			< B. Total Assigned Vert./Dir. Acreage		
			< Total Remaining Vert./Dir. Acreage		

SECTION IV. REMARKS / PURPOSE OF FILING (see instructions)

SMITH OPERATING HOLDS THE BASE 646.70 ACRE LEASE. FRANKLIN OPERATING AND JOHNSON OPERATING ARE OTHER OPERATORS ON THIS LEASE.

Well Compliance Procedures for PSA/Allocation Wells

TIPS

- Read the instructions found in our forms library and the supplemental handouts.

- For PSA or Allocation all combined acres should be reported in Section II.

- If using the P-16 data sheet remember that Section VI must reflect **current proration** schedule acreage assignments and the acres being designated to the PSA/Allocation well.

- Proration acres will be updated based of information supplied on Section III and VI.

Well Compliance Procedures for PSA/Allocation Wells

TIPS

- Properly answer Y/N to SWR 38 Exception.
- Show only completed wells, Well Compliance need not be informed of proposed locations.
- Allocation wells will receive unique RRC ID numbers unless they are part of an oil “Stacked Lateral Allocation” group.
- If wellbore profile changes, the Drilling permit will need to be amended. EX. Allocation at time of permitting, PSA at time of completion.

Railroad Commission of Texas

Operator Procedures for Stacked Laterals

Well Compliance Procedures for Stacked Laterals

THE FIRST LATERAL:

- The first well of a stacked lateral is set up and processed in the same manner as any regular producing well. SL is NOT required to be part of the lease name.
- All of the standard required documentation should be filed for this well - drilling permit, completion, and associated forms.

Well Compliance Procedures for Stacked Laterals

THE SECOND LATERAL:

- All of the standard required documentation should be filed for this well - drilling permit, completion, and associated forms.
- The letters “SL” (Stacked Lateral) should be included in the well number if feasible.
- The completion remarks section should reference that this is a “Stacked Lateral”, report RRC ID numbers for all wells that are associated with the stacked lateral. Use drilling permit numbers if an RRC ID number has not been assigned.

Well Compliance Procedures for Stacked Laterals

SUBSEQUENT LATERALS:

- Any additional lateral wells (3rd, 4th) must submit the standard required documentation - drilling permit, completion, and associated forms.

- The letters "SL" (Stacked Lateral) should be included in the well number if feasible.

- The completion remarks section should reference that this is a "Stacked Lateral", report RRC ID numbers for all wells that are associated with the stacked lateral. Use drilling permit numbers if an RRC ID number has not been assigned.

Well Compliance Procedures for Stacked Laterals

ALLOWABLES & PRODUCTION REPORTS:

- The Well Status report (G-10/W-10) should include a combined test for all current producing laterals. The test should be filed using the reporting RRC ID number. Do NOT file a test for non-reporting ID numbers.
- Production from all stacked laterals should be combined and filed under one Production Report using the reporting RRC ID number.

Contact Us

For immediate assistance please call the Well Compliance (Proration) main phone number.

512-463-6975

512-463-6955

prorationunit@rrc.texas.gov

www.rrc.texas.gov

P.O. Box 12967, Austin, Texas 78711-2967